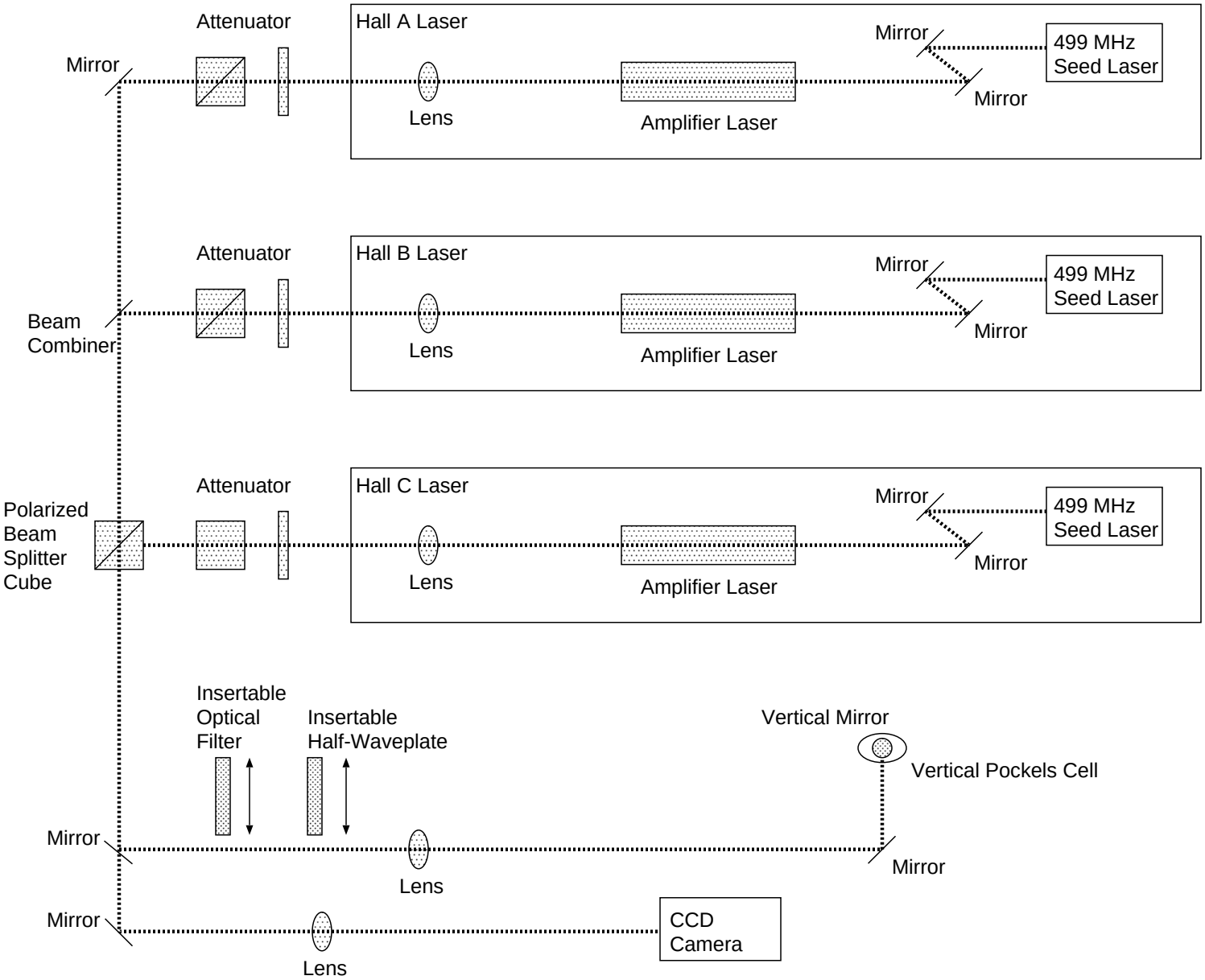
Attenuator
Hall A Laser
Mirror
499 MHz
Seed Laser
Mirror
Mirror
Lens
Amplifier Laser
Attenuator
Hall B Laser
Mirror
499 MHz
Seed Laser
Beam
Combiner
Mirror
Lens
Amplifier Laser
Attenuator
Hall C Laser
Mirror
499 MHz
Seed Laser
Polarized
Beam
Splitter
Cube
Mirror
Lens
Amplifier Laser
Insertable
Optical
Filter
Insertable
Half-Waveplate
Vertical Mirror
Vertical Pockels Cell
Mirror
Lens
Mirror
Mirror
CCD
Camera
Lens