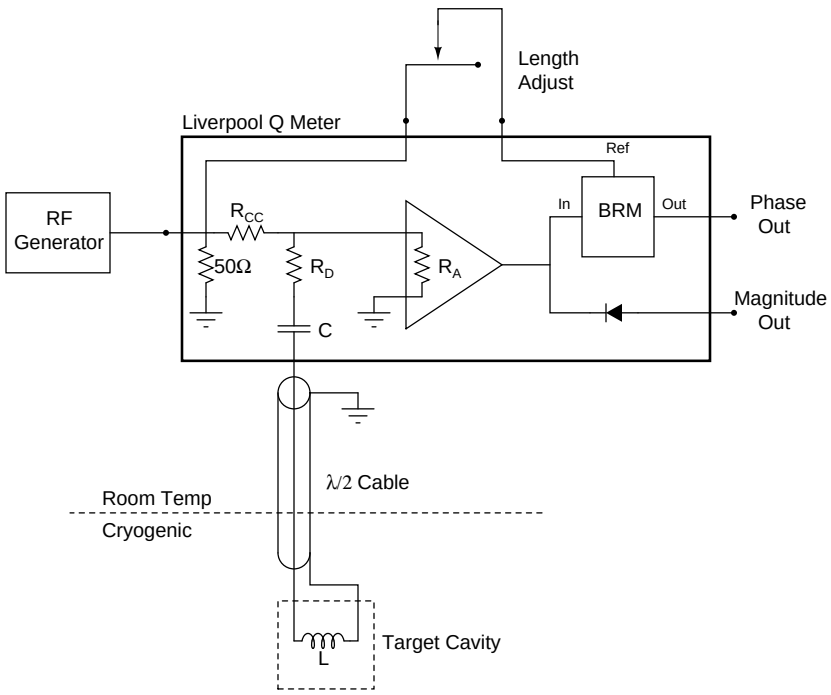
Length
Adjust
Liverpool Q Meter
Ref
RF
Generator
R_{CC}
In
BRM
Out
Phase
Out
50Ω
R_D
R_A
Magnitude
Out
C
λ/2 Cable
Room Temp
Cryogenic
Target Cavity
L