Gen Trigger Logic - Relative Timing

cdaqs1:~cdaq/gen/Documents/Timing/gen_ts6.ps

(dt=25,w=20) means time difference = 25 ns and width = 20 ns , all time unit are [ns]

e*B was done with e going ~6ns later into the 8LM than B

e*B coming out of the 8LM is the overlap time and not a fixed width !!!

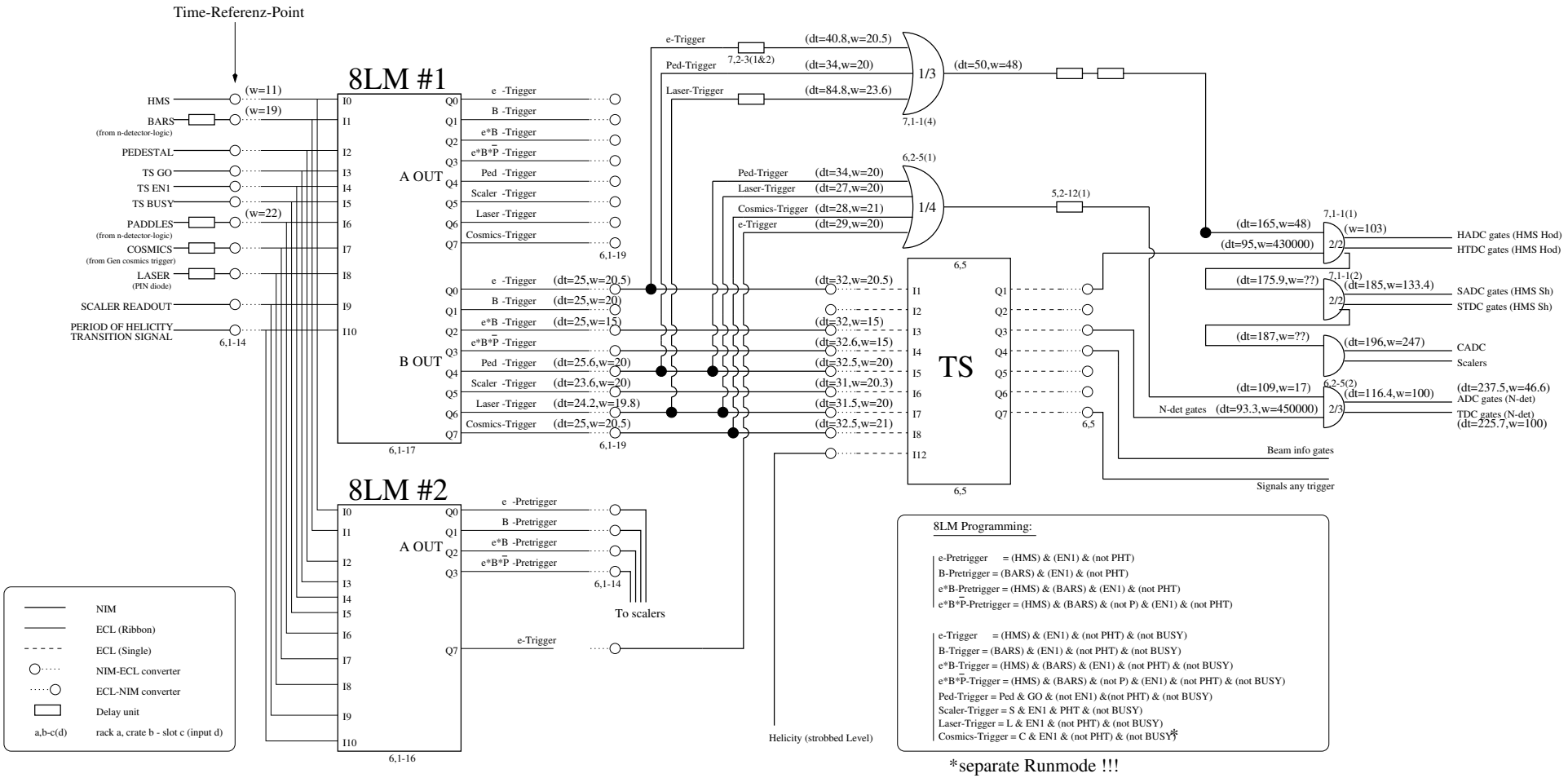

*separate Runmode !!!