n-detector-Logic
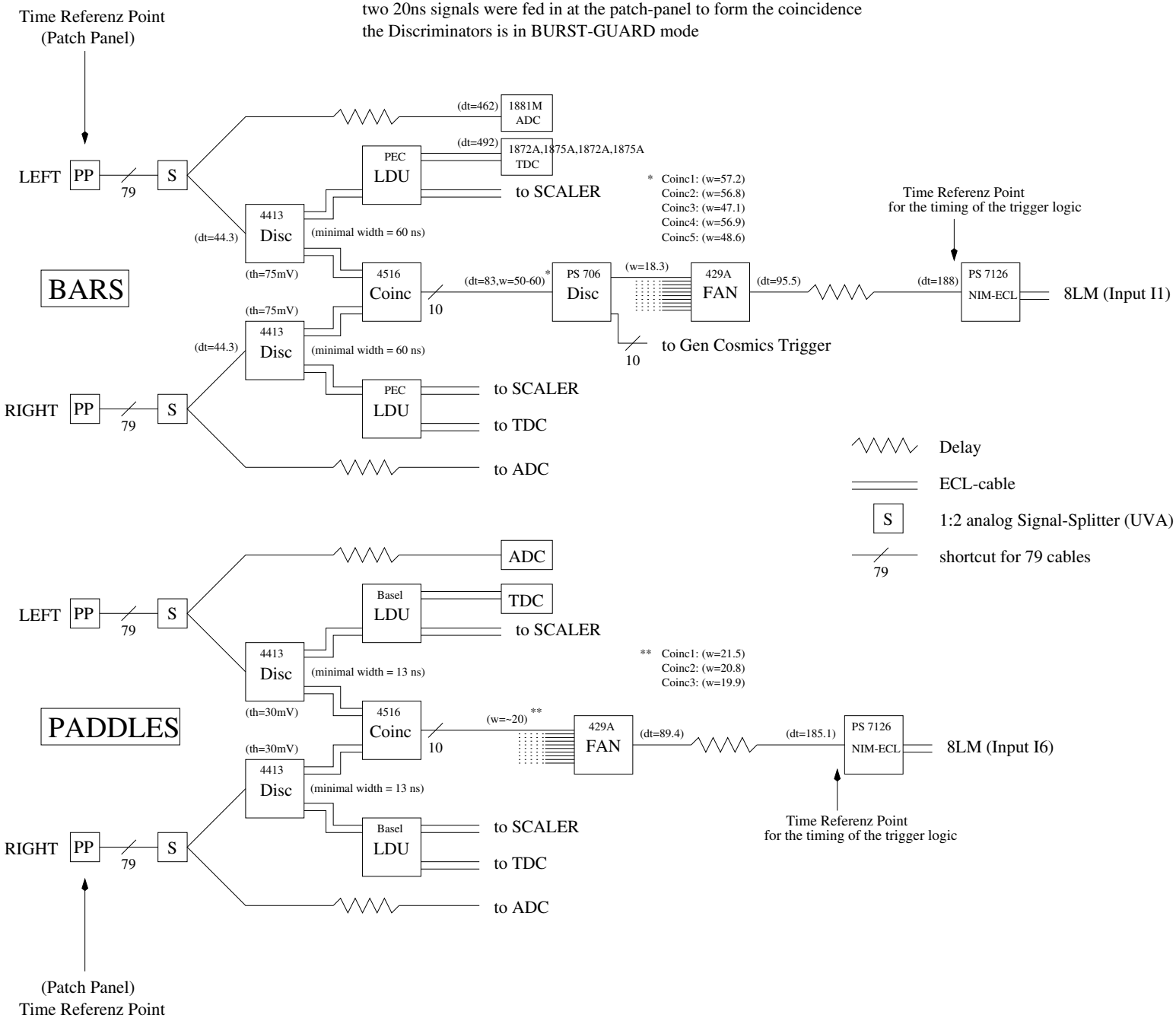
~cdaq/gen/Documents/Timing/ndet_logic_eoe.ps
two 20ns signals were fed in at the patch-panel to form the coincidence
the Discriminators is in BURST-GUARD mode